Appendix C – Hydrogeologic Analysis for Solar Development Tech Memo

This Page Intentionally Blank

AECOM
1 Columbia Place
401 West A Street, Suite 1200
San Diego, CA 92101
www.aecom.com

619 610 7600 tel
619 610 7601 fax

January 23, 2015

Gene Beale
Project Manager
Naval Facilities Engineering Command
1220 Pacific Highway
San Diego, California 92132

Dear Mr. Beale,

Subject: Hydrologic Analysis for Port Hueneme Solar Development

The following hydrologic analysis for the Port Hueneme Solar Development in Ventura demonstrates that the photovoltaic (PV) system installation will have a negligible impact on the existing drainage patterns and runoff amounts for the project site. Since the impacts are negligible, any existing drainage facilities on-site and downstream will experience no change in hydraulic capacity.

1.0 Introduction

This letter report presents the existing and proposed runoff rates for the Port Hueneme Solar Development site. This analysis will utilize the Rational Method in accordance with the 2006 Ventura County Hydrology Manual (VCHM). A Ventura County Rational Method hydrology module, in the VCRat2.6 hydrology package, was used to develop the runoff rates. This module is the Time of Concentration Calculator (VenturaTC).

The program information and download are located here: http://vcwatershed.net/hydrology.

2.0 Existing Conditions

The project site consists of five separate undeveloped sites of 28.8, 12.5, 2.5, 0.75, and 1.5 acres. The formal Parcel Numbers for these sites on Port Hueneme are 9, 13, 16, 17, and 18, respectively. See the attached Project Location Map and Photo Log.

The two larger western sites (Parcels 9 and 13) are bound to the west by West Road (parallel to Victoria Avenue) and to the north by 23rd Avenue. These sites are also bound to the south and east approximately by the alignments of 32nd Avenue and Pennsylvania Road, respectively.

These two western sites are found on fill material according to U.S. Geological Survey (USGS) Soils Survey. The westernmost site, (Parcel 9) is a closed landfill and is graded as an almost 20-foot-high, gently sloped grassed “mound” that drains away from the center towards the adjacent streets to the north and west. Drainage facilities to the south and to the northwest collect and convey the surface runoff from the site, where it flows into the municipal system. The other site, Parcel 13, is a flat, rectangular, asphalt-paved area draining towards the south. Neither site is accepting off-site flow from adjacent parcels or streets.

The three remaining eastern sites (Parcels 16, 17, and 18) are approximately bound to the west by Tract 14 (along the golf course), to the north by Mills Road, and to the south and east by the alignments of 23rd Avenue and Patterson Road, respectively.

Based on site visits and photos, Parcels 16 and 18 have known contained ponding issues due to the existing flat contours and earthen sump on both the sites. There are existing inlets on Parcels 17 and 18 at the southern end, along 23rd Avenue. The three sites are also bound by an existing private rail line that functions as a hydraulic barrier. Due to the location of these sites along existing streets and rail lines, none appear to be accepting significant off-site flow.

These three sites are found on type Camarillo loam soils (Cd) in the first 2 feet according to USGS Soils Survey. According to the Hydrologic Soils Groups definitions, the soils on these parcels are classified as a Soil Type B. The existing vegetation on top of these earthen parcels is sparse; therefore, the ground cover assumed in the hydrologic analysis is *undeveloped*.

Refer to Figures 1 and 2, Existing Hydrology Map, for the five (5) proposed project sites.

3.0 Pre-project Results

Three of the five project sites in Port Hueneme were considered as separate watershed areas and two of the project sites were combined to create one watershed. Site characteristics for each were developed using the attached exhibits from the VCHM and the existing site topographic information. The Ventura County Hydrology Time of Concentration Calculator was then used to develop the runoff rates for the 100-year storms from each existing watershed.

Table 1 summarizes the pre-project runoff rates calculated for the five project sites. Refer to Figure 1 and Figure 2, Existing Hydrology Map, for the existing watershed locations and general outfall points.

Table 1 – Project Site Flow Rates

Watershed Designation	Area	C	T_C	i_{100}	Q_{100}
	(ac)	(-)	(min)	(in/hr)	(cfs)
Parcel 9	28.0	0.84	5.04	5.10	120.07
Parcel 13	12.5	0.95	7.83	3.95	46.94
Parcel 16	2.5	0.84	5.40	5.10	10.72
Parcel 17 & 18	2.25	0.84	5.16	5.10	9.65
TOTAL:	**45.3**	**-**	**-**	**-**	**-**

4.0 Proposed Project Conditions

The proposed Port Hueneme Solar Development project will install PV panels on the entire site area for all five parcels. Refer to Figure 3 and Figure 4 for the proposed panel layout in relation to the watershed locations and outfall points for the five project sites.

In areas with surface vegetation (Parcels 9, 16, 17, and 18), ground-mounted solar PV systems may require the site to be cleared and grubbed. It is proposed that all four sites be covered with 6 to 8 inches of gravel, allowing for all-weather roads between the rows of solar panels and around the site perimeter for maintenance access. Parcel 13 is currently paved and will remain paved in the post-project condition and will not be cleared and grubbed or paved with gravel.

For Parcels 16, 17, and 18, all of the installation will be completed with minimal new impervious surfaces created. See the attached Mounting System Details. A typical configuration for a ground-mounted type of system is to install vertical members into the ground, with panel mounting hardware, frames, motors, and/or the solar panels themselves affixed atop the constructed mounting structure. Pole footings (or similar) will be used. The mounting poles are new impervious area within the project site; however, since their diameter is so small relative to the project sites, the impervious areas from the poles amount to less than 1% of the total project area. This impact is negligible in the 100-year runoff storm calculations. The ground-mounted system described above will also be used on Parcel 13, but this parcel is already completely paved so no additional impervious surface is being added.

Since Parcel 9 is a closed landfill, the ground-mounted type of system discussed above is not feasible since the landfill cap cannot be penetrated. Instead, the PV panels will be installed using a concrete ballasted system, all of which will sit on the gravel layer. All of the installation will be completed creating minimal new impervious surfaces. The concrete ballasts are assumed to be 4 feet long by 9 inches wide; see the attached Mounting System Details. The ballasts will be less than 1% of the total project area, making the impact negligible in the 100-year runoff storm calculations.

The PV panels will be approximately 5 feet wide and 3 feet long. The number of panels in each array, the type of ground-mounted system used, and the array configuration will depend on the third-party developer's site design, but in this memo we are assuming the attached concept panel layouts. The PV panels are impervious, but the runoff will still make its way to the surface by running off the sides of the panels. Although more concentrated than the existing conditions, the flow is minor, between 0.001 and 0.002 cfs/ft depending on the concept panel layout, and will not cause erosion of the existing surface and is therefore deemed insignificant. See the Array Runoff Calculations attached to this letter.

Since very minimal increase will occur in impervious surfaces for Parcels 9, 16, 17, and 18 as a result of the project and the land cover will remain pervious with the addition of gravel, there will be no change in the runoff characteristics or patterns due to the project. The runoff patterns will also continue to sheet flow to match existing conditions. The above is true for Parcel 13 as well since the existing surface is paved and will remain paved in the post-project condition.

5.0 Post-project Results

Because there is a negligible increase in impervious area, no changes in soil type or amount of pavement, and minimal hydraulic changes in ground cover, the hydrologic results presented in the tables above will remain the same in the post-project conditions. Ultimately, no changes in the project runoff will occur due to the construction of the PV system.

6.0 Hydraulic Analysis

No hydraulic analysis was performed for this project since no pipes, culverts, or channels were affected by the construction of the project.

Parcel 9 has existing concrete ditches in the northwest and southeast corners to convey the runoff from the closed landfill down the side slopes and into the municipal storm drain system. However, construction of the PV system will not affect these channels, which will remain in the post-project condition. It is anticipated that their capacity is adequate since there is no change in runoff due to the proposed project. The same applies to the existing storm drain inlets and pipe along the south side of Parcels 17 and 18.

AECOM

7.0 Conclusions

A hydrological analysis of a 100-year storm event for the five project sites was performed and pre- and post-project flow rates were determined. There is no change in the pre- and post-project flow rates and patterns due to installation of the PV System. Therefore, the project will not impact the current on-site or off-site drainage and any existing drainage structures outside of the project site will not require modification.

Michael W. Brüning, P.E.
Senior Engineer/Technical Lead

cc: Becky Oldham: Potomac-Hudson Engineering, Inc., Project File

Attachments:
- Project Location Map
- Photo Log
- Figures 1 through 4
- VCHM Exhibits
- VcRAT Output
- Proposed Solar PV Mounting
- Proposed Concept Plans
- Array Runoff Calculations

60335329 port hueneme - hydrology ltr rpt 012315

Figure 2-1. Proposed Project Sites

Photo Log

Parcel 9

Photo 1. View north from middle of Parcel 9.

Parcel 13

Photo 2. View east looking into Parcel 13.

Parcel 16

Photo 3. View northeast looking into Parcel 16 from the southern-most corner. Temporary ponded area in foreground.

Parcel 17

Photo 4. View west looking into Parcel 17 from the southeastern corner.

Parcel 18

Photo 5. View north looking into Parcel 18 from the southeastern corner.

Photo 6. View north of temporary ponded area in middle of Parcel 18.

Photo 7. View north of temporary ponded area in buffer area of Parcel 18.

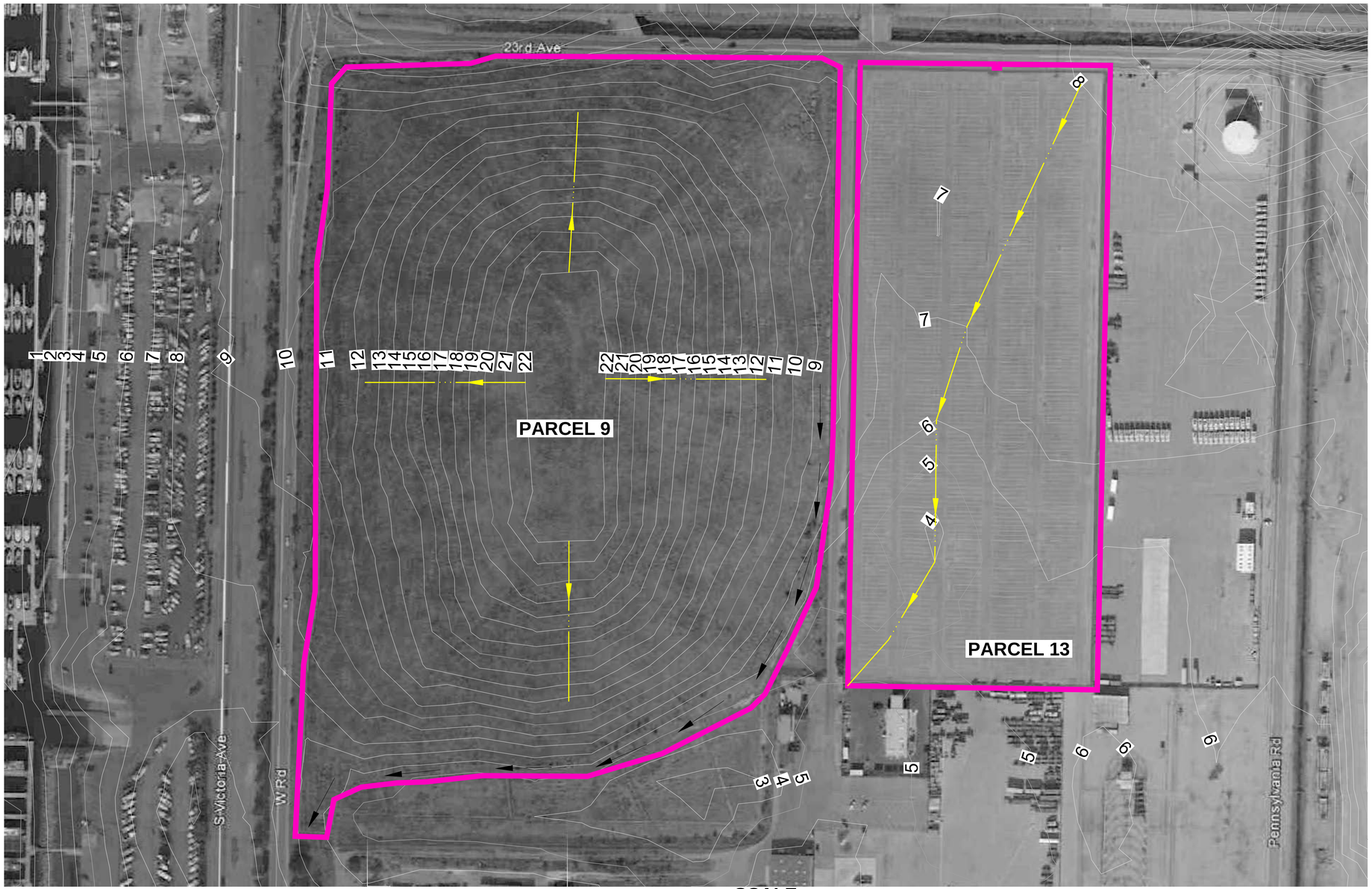

SCALE:
1" = 100'

LEGEND:

FLOW PATH

WATERSHED BOUNDARY

FLOW DIRECTION

AECOM

AECOM USA, Inc.
401 WEST A STREET, SUITE 1200
SAN DIEGO, CA 92101
T 619.610.7600 F 619.610.7601
www.aecom.com

NAVAL BASE VENTURA COUNTY
PORT HUENEMA

EXISTING HYDROLOGY MAP
PARCELS 9 & 13

AECOM PROJECT NO.
60335329

FIGURE
1

DWG: \\ussdg1fp001.na.aecomnet.com\DATA\projects\2015\60335329_NBVC_PV_EA\900-CAD-GIS\910 CAD-BIM\901 Models\Existing Exhibit.dwg Layout Name: Existing Pt Hueneme 13 - Plotted by: L'Ecluse, Rion Date: 1/26/2015 - 1:32 PM
XREFS: G-BD24x36h - HUEN-3-SK-111-002-001_Topo IMAGES: GEI969C.jpg - GEIEOF9.jpg -

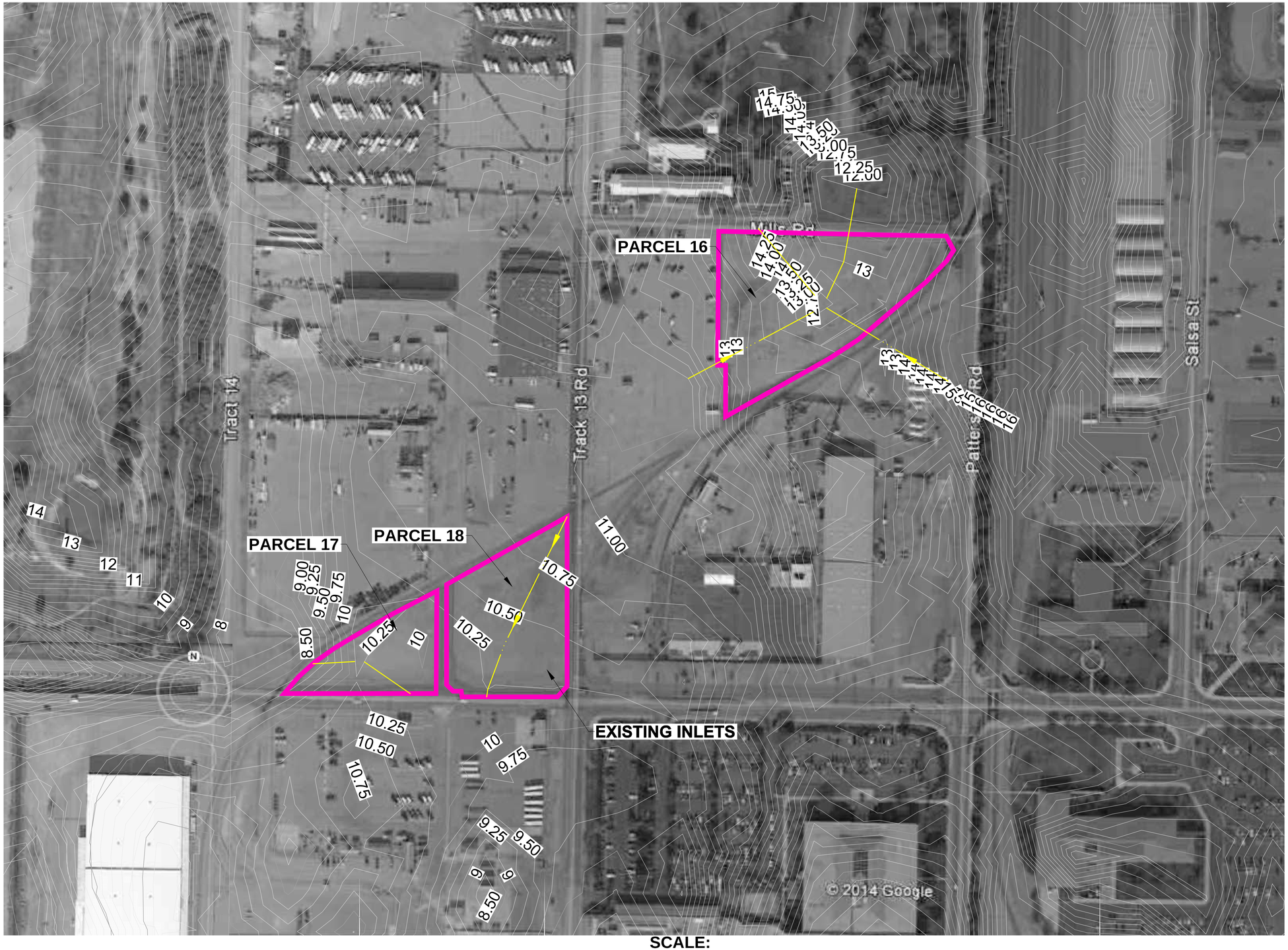

N

SCALE:
1" = 100'

LEGEND:
FLOW PATH
WATERSHED BOUNDARY
FLOW DIRECTION

AECOM
AECOM USA, Inc.
401 WEST A STREET, SUITE 1200
SAN DIEGO, CA 92101
T 619.610.7600 F 619.610.7601
www.aecom.com

NAVAL BASE VENTURA COUNTY
PORT HUENEMA

EXISTING HYDROLOGY MAP
PARCELS 16, 17, & 18

AECOM PROJECT NO.
60335329

FIGURE
2

DWG: \\usadc1fp001.no.aecomnet.com\DATA\projects\2015\60335329_NBVC_PV_EA\900-CAD-GIS\910 CAD-BIM\901 Models\Existing Exhibit.dwg Layout Name: Existing Pt Hueneme 16 & 17 – Plotted by: L'Ecluse, Rion Date: 1/26/2015 – 1:32 PM
XREFS: G-BD24x36h – HUEN-3-SK-111-002-001_Topo IMAGES: GEB69C.jpg – GEEDF9.jpg –

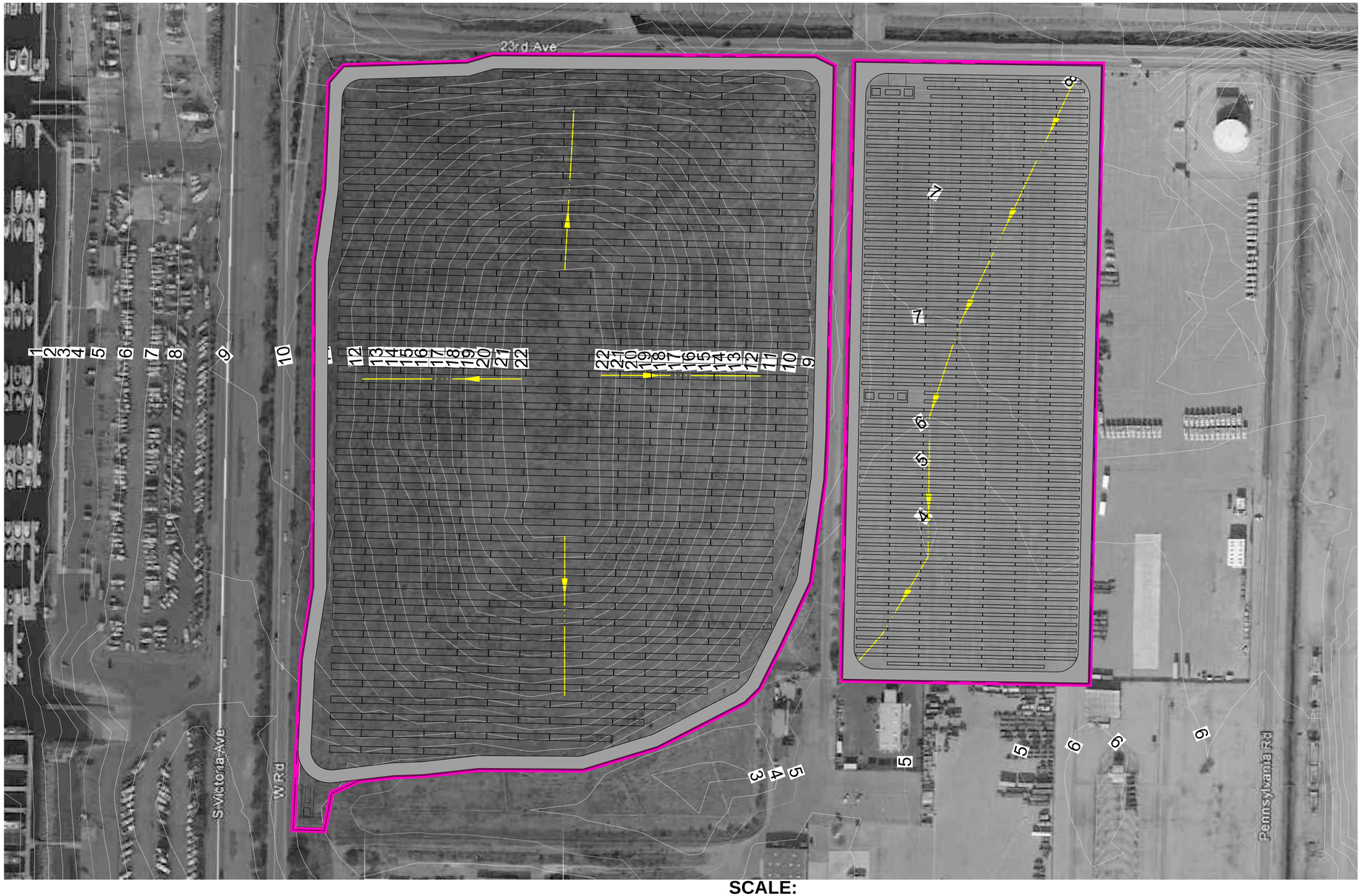

SCALE:
1" = 100'

LEGEND:

FLOW PATH

WATERSHED BOUNDARY

AECOM

AECOM USA, Inc.
401 WEST A STREET, SUITE 1200
SAN DIEGO, CA 92101
T 619.610.7600 F 619.610.7601
www.aecom.com

NAVAL BASE VENTURA COUNTY
PORT HUENEMA

PROPOSED HYDROLOGY MAP
PARCELS 9 & 13

AECOM PROJECT NO.
60335329

FIGURE
3

DWG: \\ussdg1fp001.na.aecomnet.com\DATA\projects\2015\60335329_NBVC_PV_EA\900-CAD-GIS\910 CAD-BIM\901 Models\Proposed Exhibit.dwg Layout Name: Proposed Pt Hueneme 13 - Plotted by: L'Ecluse, Rion Date: 1/26/2015 - 1:30 PM
XREFS: G-BD24x36h - HUEN-3-SK-111-002-001_Topo - HUEN-3-SK-111-002-001_Parcels IMAGES: GEI969C.jpg - GEIEOF9.jpg -

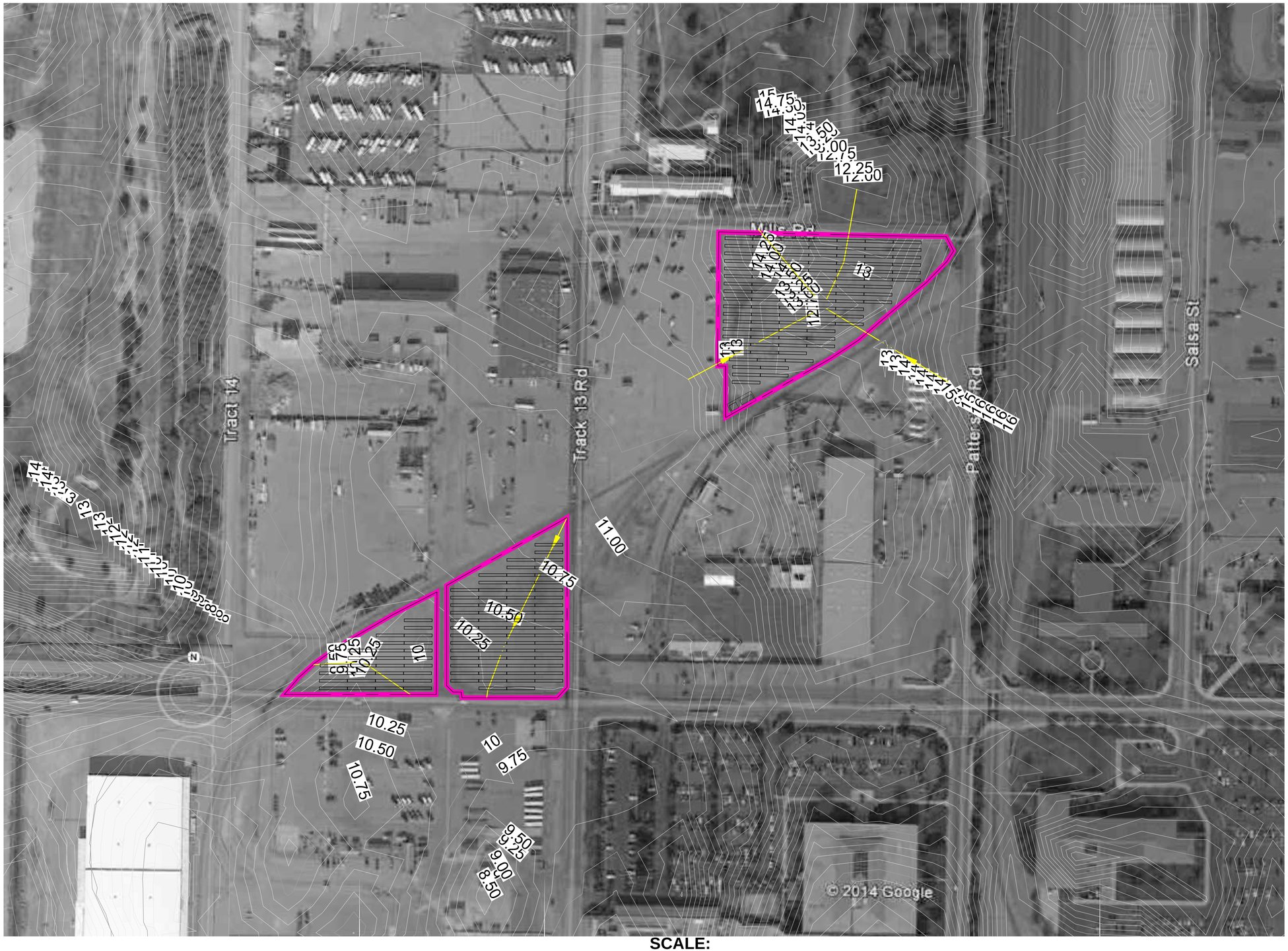

N

SCALE:
1" = 100'

LEGEND:
FLOW PATH
WATERSHED BOUNDARY

AECOM
AECOM USA, Inc.
401 WEST A STREET, SUITE 1200
SAN DIEGO, CA 92101
T 619.610.7600 F 619.610.7601
www.aecom.com

NAVAL BASE VENTURA COUNTY
PORT HUENEMA

PROPOSED HYDROLOGY MAP
PARCELS 16, 17, & 18

AECOM PROJECT NO.
60335329

FIGURE
4

DWG: \\usdc1fs001.na.aecomnet.com\DATA\projects\2015\60335329_NBVC_PV_EA\900-CAD-GIS\910 CAD-BIM\901 Models\Proposed Exhibit.dwg Layout Name: Proposed Pt Hueneme 16 & 17 – Plotted by: L'Ecluse, Rion Date: 1/26/2015 – 1:30 PM
XREFS: G-B024x36h – HUEN-3-SK-111-002-001_Topo – HUEN-3-SK-111-002-001_Parcels IMAGES: GE9690.jpg – GEIE0F9.jpg

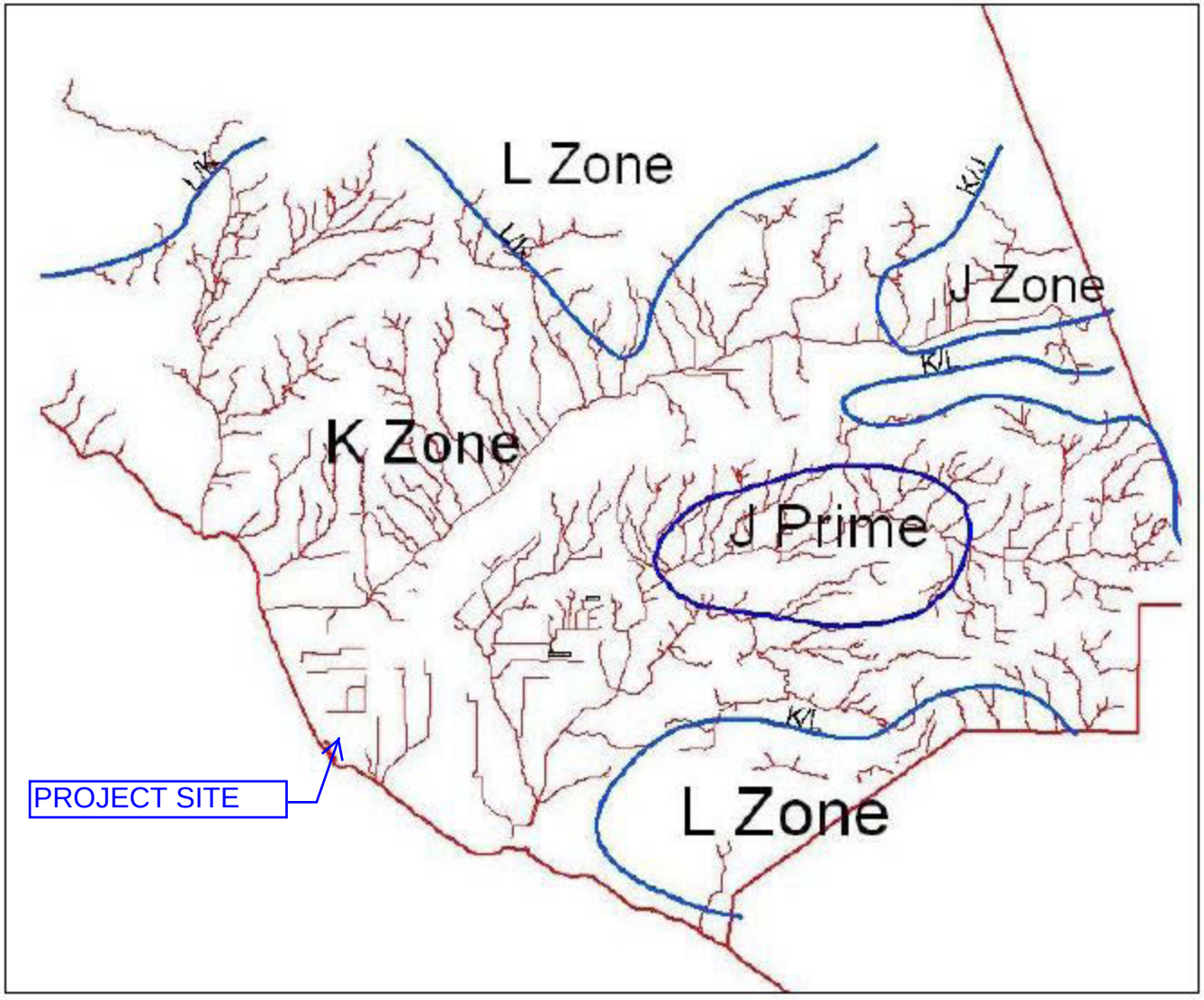

Rainfall Zone Map with VCWPD Jurisdictional (Redline) Channels

100-Year, 1-Day Rainfall Contours for Ventura County

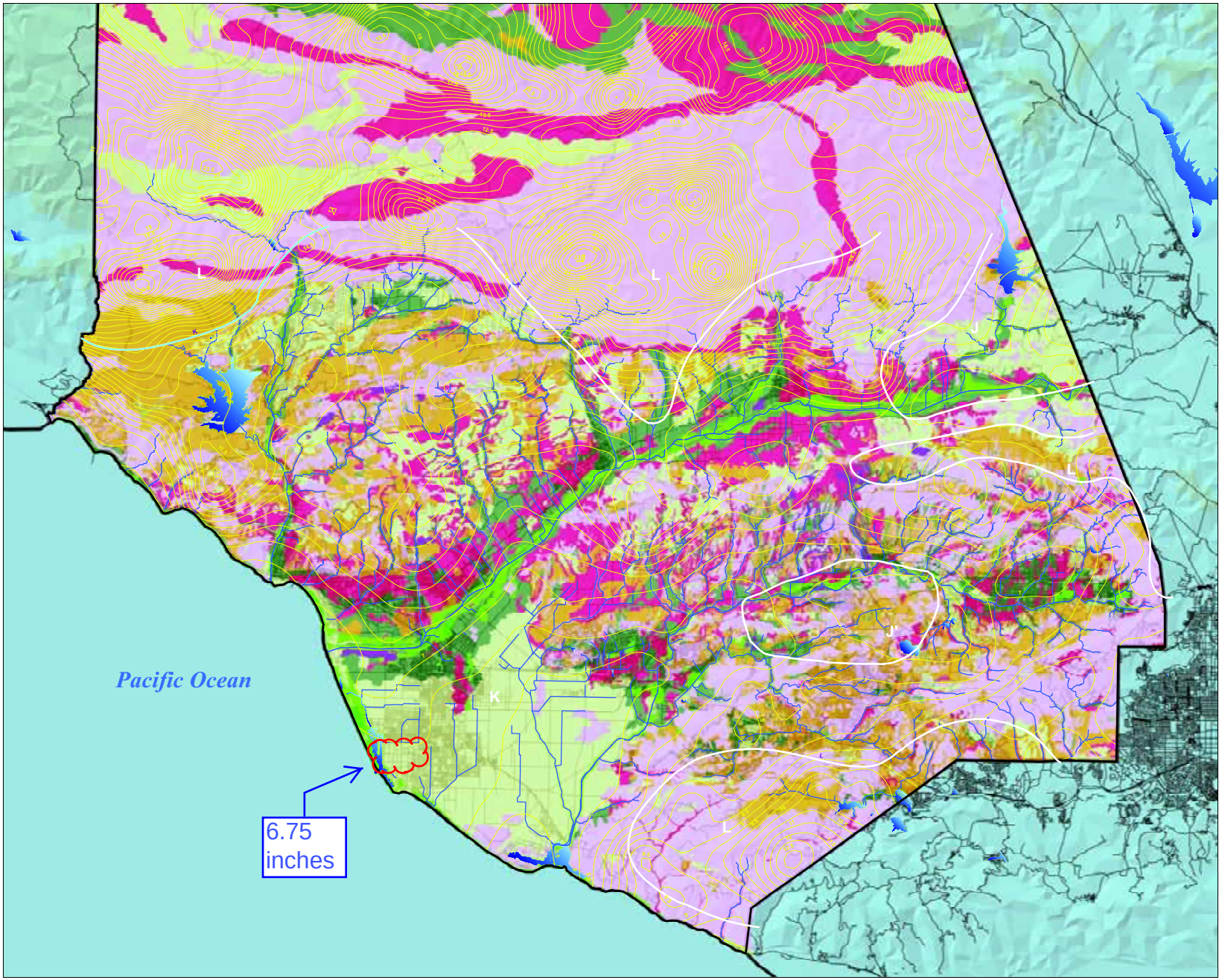

0 0.5 1 2 3 4 5 6 Miles

N W E S

Rainfall Zones

Ventura County Boundary

Rainfall Contours (Inches)-100yr

VCWPD Channels

Lakes

Ventura County Soil Numbers

1

2

3

4

5

6

7

Major Streets and Highways

Topography of Ventura County

Elevation (ft.)

7,848 - 8,832

6,864 - 7,848

5,881 - 6,864

4,897 - 5,881

3,914 - 4,897

2,930 - 3,914

1,947 - 2,930

963 - 1,947

0 - 963

VENTURA COUNTY WATERSHED PROTECTION DISTRICT
TIME OF CONCENTRATION
TC Program Version: 2.6.2009.7
Project: Port Hueneme Solar
Date: 1/5/2015 8:59:58 AM
Engineer: MwBruning
Consultant: AECOM

S U M M A R Y O F C O M P U T A T I O N S

Watershed Name: Port Hueneme

Name	Zone	Storm	Soil	Area (acres)	TC (min)
Parcel 9	K	100	3.00	28.0 / 28	5.043 / 5
Parcel 13	K	100	3.00	12.5 / 13	7.828 / 8
Parcel 16	K	100	3.00	2.5 / 3	5.400 / 5
Parcel 17 18	K	100	3.00	2.3 / 2	5.163 / 5

Watershed Name: Port Hueneme

Sub-Area Name: Parcel 9
Tc: 5.043 Minutes
DATA FOR SUB AREA 1

SUB AREA TIME OF CONCENTRATION: 5.043 min. = 5 min.

SUB AREA INPUT DATA

Sub Area Name: Parcel 9
Total Area (ac): 28
Flood Zone: 2
Rainfall Zone: K
Storm Frequency (years): 100
Development Type: Undeveloped
Soil Type: 3.00
Percent Impervious: 0
SUB AREA OUTPUT

Intensity (in/hr): 5.100
C Total: 0.841
Sum Q Segments (cfs): 120.07
Q Total (cfs): 120.07
Sum Percent Area (%): 100.0
Sum of Flow Path Travel Times (sec): 302.58
Time of Concentration (min): 5.043

DATA FOR FLOW PATH 1

Flow Path Name: 9a
FLOW PATH TRAVEL TIME (min): 1.9742
Flow Type: Overland
Length (ft): 100
Top Elevation (ft): 23
Bottom Elevation (ft): 20
Contributing Area (acres): 2
Percent of Sub-Area (%): 7.1
Overland Type: Valley
Development Type: Undeveloped
Map Slope: 0.0300
Effective Slope: 0.0300
Q for Flow Path (cfs): 8.58
Avg Velocity (ft/s): 0.84
Passed Scour Check: YES
Scour Velocity (ft/sec): 4.04

DATA FOR FLOW PATH 2

Flow Path Name: 9b
FLOW PATH TRAVEL TIME (min): 0.8377
Flow Type: Natural Channel

Length (ft): 400
Top Elevation (ft): 20
Bottom Elevation (ft): 9
Contributing Area (acres): 11
Percent of Sub-Area (%): 39.3
Overland Type: Valley
Map Slope: 0.0275
Effective Slope: 0.0275
Q for Flow Path (cfs): 47.17
Q Top (cfs): 8.58
Q Bottom (cfs): 55.75
Velocity Top (ft/s): 3.99
Velocity Bottom (ft/s): 6.62
Avg Velocity (ft/s): 5.31
Wave Velocity (ft/s): 7.96

DATA FOR FLOW PATH 3

Flow Path Name: 9c
FLOW PATH TRAVEL TIME (min): 2.2310
Flow Type: Channel
Length (ft): 1000
Top Elevation (ft): 9
Bottom Elevation (ft): 7
Contributing Area (acres): 15
Percent of Sub-Area (%): 53.6
Bottom Width (ft): 3
Side Slope (H:V): 1
Manning's N: 0.013
Map Slope: 0.0020
Q for Flow Path (cfs): 64.32
Q Top (cfs): 55.75
Q Bottom (cfs): 120.07
Velocity Top (ft/s): 5.62
Velocity Bottom (ft/s): 6.85
Avg Velocity (ft/s): 6.24
Wave Velocity (ft/s): 7.47

Project: Port Hueneme Solar
Date: 1/5/2015 8:59:58 AM
Engineer: MwBruning
Consultant: AECOM

Sub-Area Name: Parcel 13
Tc: 7.828 Minutes
DATA FOR SUB AREA 2

SUB AREA TIME OF CONCENTRATION: 7.828 min. = 8 min.

SUB AREA INPUT DATA

Sub Area Name: Parcel 13
Total Area (ac): 12.5
Flood Zone: 2
Rainfall Zone: K
Storm Frequency (years): 100
Development Type: Industrial
Soil Type: 3.00
Percent Impervious: 100
SUB AREA OUTPUT

Intensity (in/hr): 3.953
C Total: 0.950
Sum Q Segments (cfs): 46.94
Q Total (cfs): 46.94
Sum Percent Area (%): 100.0
Sum of Flow Path Travel Times (sec): 469.67
Time of Concentration (min): 7.828

DATA FOR FLOW PATH 1

Flow Path Name: 13a
FLOW PATH TRAVEL TIME (min): 3.3333
Flow Type: Overland
Length (ft): 200
Top Elevation (ft): 8
Bottom Elevation (ft): 7
Contributing Area (acres): 1
Percent of Sub-Area (%): 8.0
Overland Type: Valley
Development Type: Industrial
Map Slope: 0.0050
Effective Slope: 0.0050
Q for Flow Path (cfs): 3.75
Avg Velocity (ft/s): 1.00
Passed Scour Check: N/A

DATA FOR FLOW PATH 2

Flow Path Name: 13b
FLOW PATH TRAVEL TIME (min): 4.4944

Flow Type: Channel
Length (ft): 1050
Top Elevation (ft): 7
Bottom Elevation (ft): 3
Contributing Area (acres): 11.5
Percent of Sub-Area (%): 92.0
Bottom Width (ft): 10
Side Slope (H:V): 20
Manning's N: 0.016
Map Slope: 0.0038
Q for Flow Path (cfs): 43.18
Q Top (cfs): 3.75
Q Bottom (cfs): 46.94
Velocity Top (ft/s): 1.56
Velocity Bottom (ft/s): 3.18
Avg Velocity (ft/s): 2.37
Wave Velocity (ft/s): 3.89

Project: Port Hueneme Solar
Date: 1/5/2015 8:59:58 AM
Engineer: MwBruning
Consultant: AECOM

Sub-Area Name: Parcel 16
Tc: 5.400 Minutes
DATA FOR SUB AREA 3

SUB AREA TIME OF CONCENTRATION: 5.400 min. = 5 min.

SUB AREA INPUT DATA

Sub Area Name: Parcel 16
Total Area (ac): 2.5
Flood Zone: 2
Rainfall Zone: K
Storm Frequency (years): 100
Development Type: Undeveloped
Soil Type: 3.00
Percent Impervious: 0
SUB AREA OUTPUT

Intensity (in/hr): 5.100
C Total: 0.841
Sum Q Segments (cfs): 10.72
Q Total (cfs): 10.72
Sum Percent Area (%): 100.0
Sum of Flow Path Travel Times (sec): 323.97
Time of Concentration (min): 5.400

DATA FOR FLOW PATH 1

Flow Path Name: 16a
FLOW PATH TRAVEL TIME (min): 3.1259
Flow Type: Overland
Length (ft): 150
Top Elevation (ft): 14.25
Bottom Elevation (ft): 13
Contributing Area (acres): 1
Percent of Sub-Area (%): 40.0
Overland Type: Valley
Development Type: Undeveloped
Map Slope: 0.0083
Effective Slope: 0.0083
Q for Flow Path (cfs): 4.29
Avg Velocity (ft/s): 0.80
Passed Scour Check: YES
Scour Velocity (ft/sec): 1.81

DATA FOR FLOW PATH 2

Flow Path Name: 16b

FLOW PATH TRAVEL TIME (min): 2.2736
Flow Type: Natural Channel
Length (ft): 280
Top Elevation (ft): 13
Bottom Elevation (ft): 12
Contributing Area (acres): 1.5
Percent of Sub-Area (%): 60.0
Overland Type: Valley
Map Slope: 0.0036
Effective Slope: 0.0036
Q for Flow Path (cfs): 6.43
Q Top (cfs): 4.29
Q Bottom (cfs): 10.72
Velocity Top (ft/s): 1.22
Velocity Bottom (ft/s): 1.52
Avg Velocity (ft/s): 1.37
Wave Velocity (ft/s): 2.05

Project: Port Hueneme Solar
Date: 1/5/2015 8:59:58 AM
Engineer: MwBruning
Consultant: AECOM

Sub-Area Name: Parcel 17 18
Tc: 5.163 Minutes
DATA FOR SUB AREA 4

SUB AREA TIME OF CONCENTRATION: 5.163 min. = 5 min.

SUB AREA INPUT DATA

Sub Area Name: Parcel 17 18
Total Area (ac): 2.25
Flood Zone: 2
Rainfall Zone: K
Storm Frequency (years): 100
Development Type: Undeveloped
Soil Type: 3.00
Percent Impervious: 0
SUB AREA OUTPUT

Intensity (in/hr): 5.100
C Total: 0.841
Sum Q Segments (cfs): 9.65
Q Total (cfs): 9.65
Sum Percent Area (%): 100.0
Sum of Flow Path Travel Times (sec): 309.75
Time of Concentration (min): 5.163

DATA FOR FLOW PATH 1

Flow Path Name: 17 18a
FLOW PATH TRAVEL TIME (min): 3.1348
Flow Type: Overland
Length (ft): 150
Top Elevation (ft): 11
Bottom Elevation (ft): 10
Contributing Area (acres): 0.75
Percent of Sub-Area (%): 33.3
Overland Type: Valley
Development Type: Undeveloped
Map Slope: 0.0067
Effective Slope: 0.0067
Q for Flow Path (cfs): 3.22
Avg Velocity (ft/s): 0.80
Passed Scour Check: YES
Scour Velocity (ft/sec): 1.52

DATA FOR FLOW PATH 2

Flow Path Name: 17 18b

FLOW PATH TRAVEL TIME (min): 2.0278
Flow Type: Natural Channel
Length (ft): 200
Top Elevation (ft): 10
Bottom Elevation (ft): 9.5
Contributing Area (acres): 1.5
Percent of Sub-Area (%): 66.7
Overland Type: Valley
Map Slope: 0.0025
Effective Slope: 0.0025
Q for Flow Path (cfs): 6.43
Q Top (cfs): 3.22
Q Bottom (cfs): 9.65
Velocity Top (ft/s): 0.95
Velocity Bottom (ft/s): 1.24
Avg Velocity (ft/s): 1.10
Wave Velocity (ft/s): 1.64

Proposed Solar PV Mounting

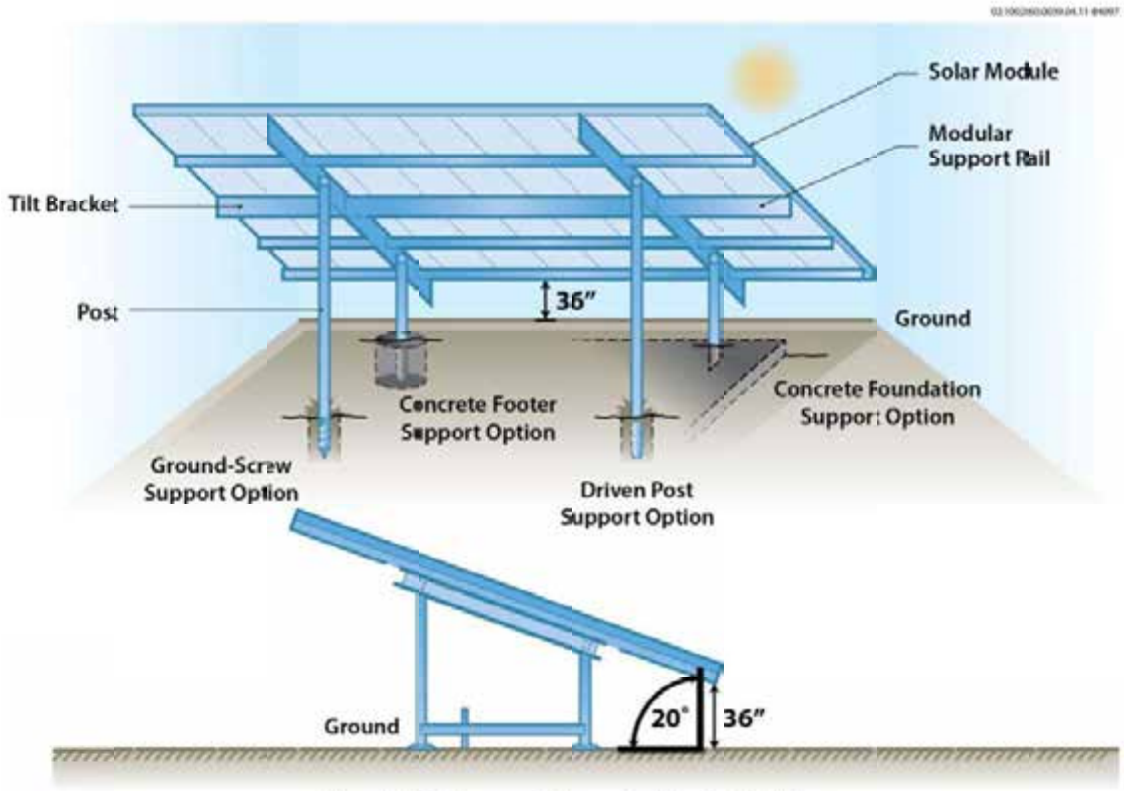

Fixed-Tilt Ground-Mounted Solar PV Array

ASSUMED SOLAR MOUNT FOR PARCEL 9

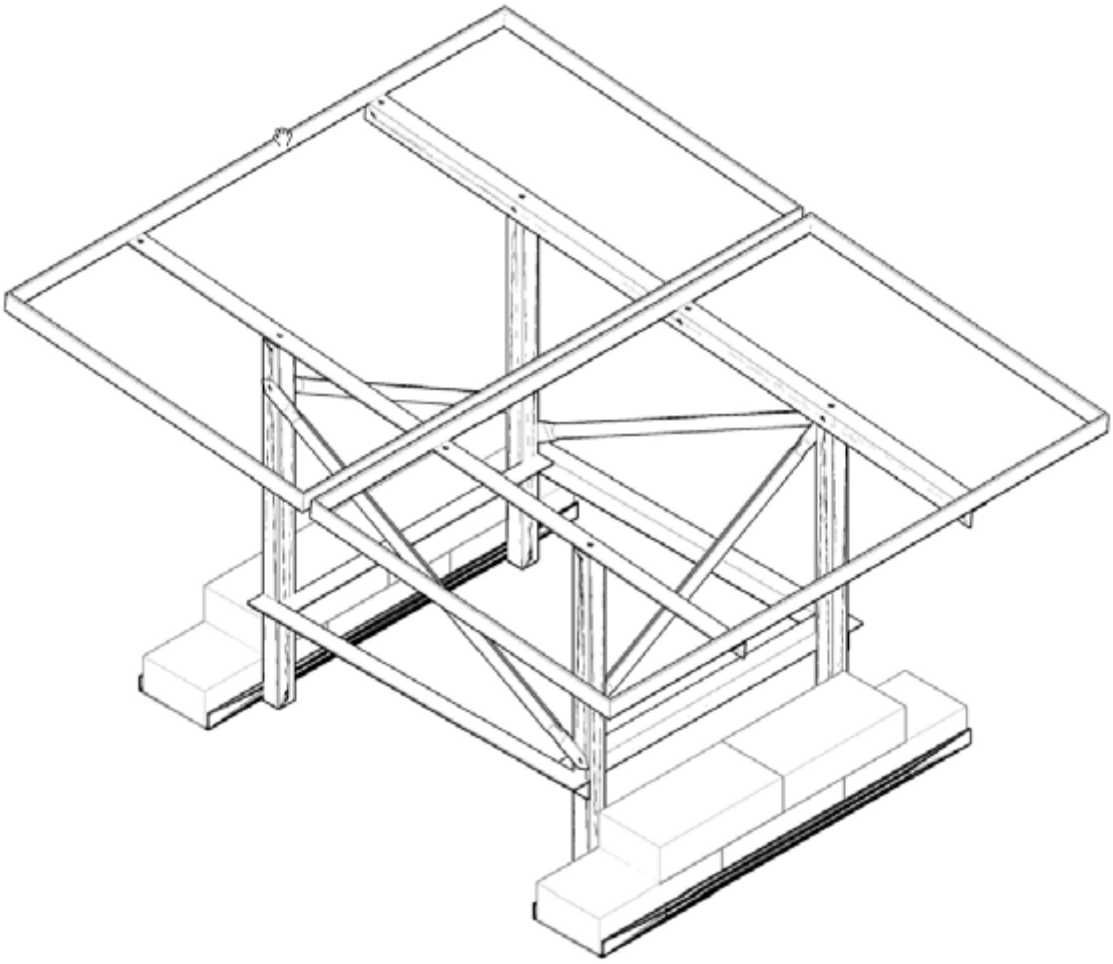

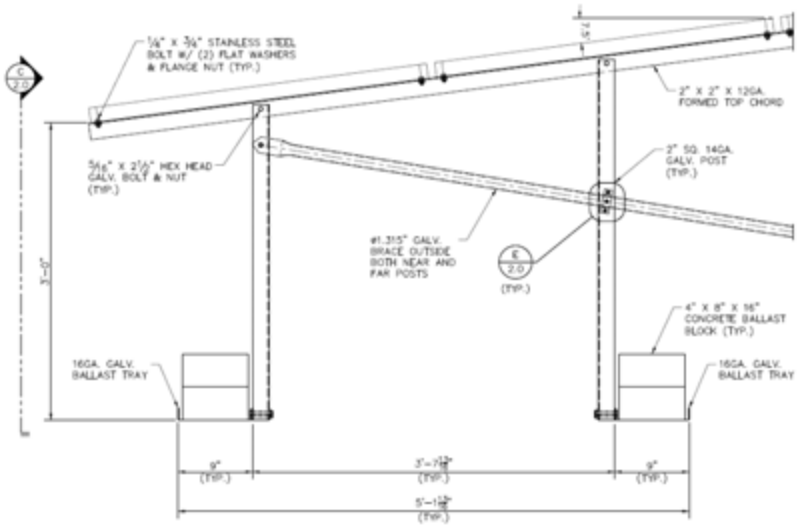

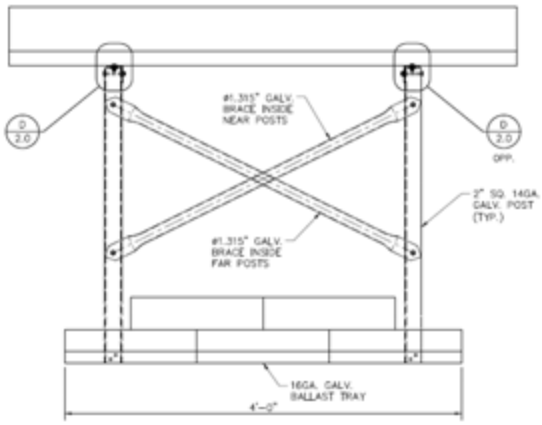

PV MOUNTING INTERFACE

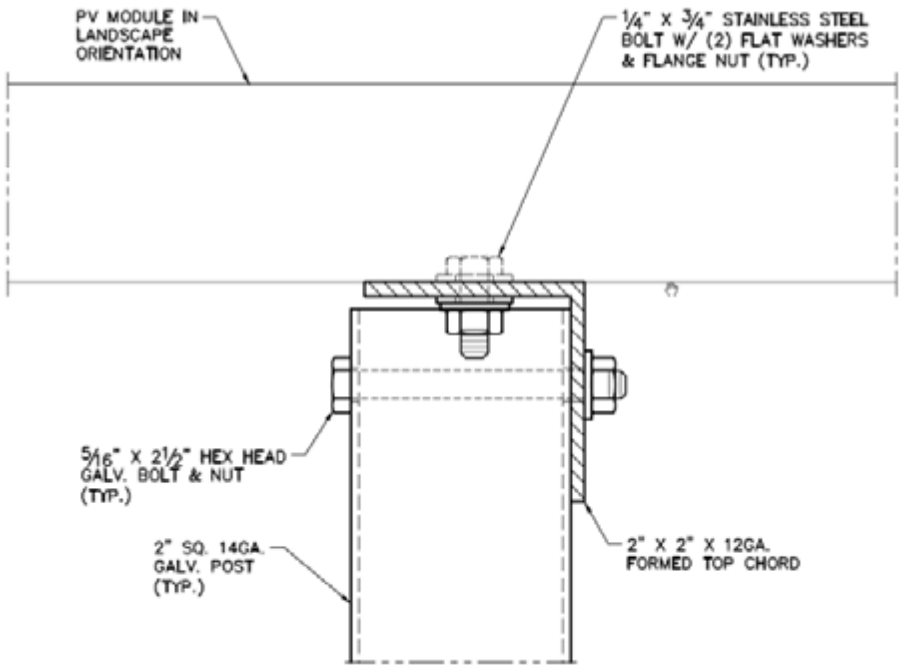

CLOSE UP OF BALLAST SYSTEM

(Note: gravel at Tequesquite will be limited to underneath and around the perimeter of the concrete base – gravel will not cover the landfill)

CLOSE UP OF UNDERSIDE